Calhoun
Institutional Archive of the Naval Postgraduate School

Calhoun: The NPS Institutional Archive

DSpace Repository

Theses and Dissertations | 1. Thesis and Dissertation Collection, all items

1970

Relationships between the sensitivity model and the mutually reciprocal adjoint network.

Sanne, Bernd Günter

Monterey, California ; Naval Postgraduate School

http://hdl.handle.net/10945/15146

Downloaded from NPS Archive: Calhoun

http://www.nps.edu/library

Calhoun is the Naval Postgraduate School's public access digital repository for research materials and institutional publications created by the NPS community. Calhoun is named for Professor of Mathematics Guy K. Calhoun, NPS's first appointed -- and published -- scholarly author.

Dudley Knox Library / Naval Postgraduate School
411 Dyer Road / 1 University Circle
Monterey, California USA 93943

RELATIONSHIPS BETWEEN THE SENSITIVITY MODEL AND THE MUTUALLY RECIPROCAL ADJOINT NETWORK

by

Bernd Günter Sanne

United States
Naval Postgraduate School

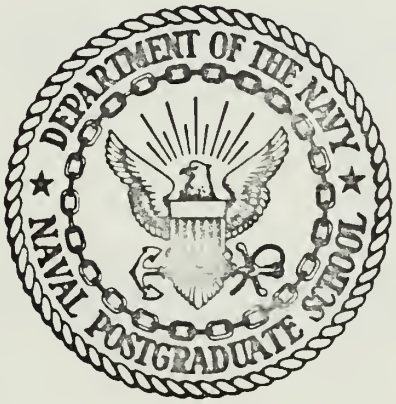

THESIS

RELATIONSHIPS BETWEEN THE SENSITIVITY MODEL AND THE MUTUALLY RECIPROCAL ADJOINT NETWORK

by

Bernd Günter Sanne

September 1970

This document has been approved for public release and sale; its distribution is unlimited.

T136504

Relationships Between the Sensitivity Model and the Mutually Reciprocal Adjoint Network

by

Bernd Günter Sanne
Lieutenant Commander, Federal German Navy

Submitted in partial fulfillment of the
requirements for the degree of

MASTER OF SCIENCE IN ELECTRICAL ENGINEERING

from the

NAVAL POSTGRADUATE SCHOOL
September 1970

LIBRARY
NAVAL POSTGRADUATE SCHOOL
MONTEREY, CALIF. 93940

ABSTRACT

There are two methods which have been developed independently for computing network sensitivities. Both computations may be carried out in the frequency or in the time domains. One method involves the analyses of two networks - the original and its mutually reciprocal adjoint. The second method uses a sensitivity model for the circuit. It is shown that the sensitivity model and the mutually reciprocal adjoint circuit are essentially the same; the sensitivity model being useful for calculating single parameter sensitivity in the time domain, the adjoint circuit being useful for calculating sensitivity for several parameters in the frequency domain.

TABLE OF CONTENTS

I. INTRODUCTION ---------- 9

II. THE MUTUAL INTERRECIPROCAL ADJOINT NETWORK --------- 11

A. THE ADJOINT NETWORK ---------- 11

1. The Linear Time Invariant Case ---------- 11

2. The Linear Time Variable Case ---------- 13

B. THE INTERRECIPROCAL THEOREM ---------- 18

C. DEFINITION OF THE ADJOINT NETWORK IN TERMS OF TOPOLOGICAL RELATIONSHIPS ---------- 20

D. USE OF THE ADJOINT NETWORK FOR SENSITIVITY CALCULATIONS ---------- 25

III. SENSITIVITY MODELS ---------- 28

A. DEFINITION FOR THE LINEAR CASE ---------- 28

B. DEFINITION FOR THE NONLINEAR CASE ---------- 32

IV. RELATIONSHIP BETWEEN THE SENSITIVITY MODEL AND THE MUTUAL ADJOINT NETWORK APPROACH TO SENSITIVITY ----- 35

A. PROOF OF NETWORK SENSITIVITY USING THE ADJOINT NETWORK AND TELLEGEN'S THEOREM ---------- 35

1. Passive Network Parameters ---------- 37

2. Dependent Sources ---------- 40

B. TRANSITION BETWEEN APPROACHES ---------- 45

C. COMPARISON OF THE APPROACHES ---------- 50

BIBLIOGRAPHY ---------- 52

INITIAL DISTRIBUTION LIST ---------- 53

FORM DD 1473 ---------- 55

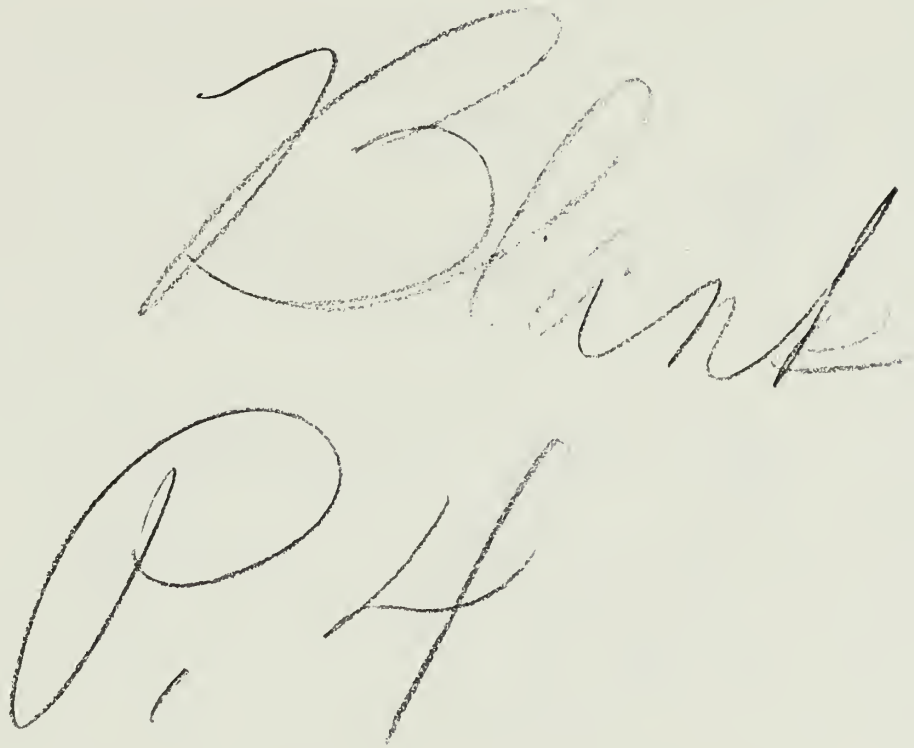

LIST OF TABLES

I Definition of Network Emmittance Functions --------- 26

II Sensitivities of a Network Function ---------- 27

III Sensitivity Models and Their Excitation for the Linear Network ---------- 29

IV Sensitivity Models and Their Excitation for the Nonlinear Case ---------- 32

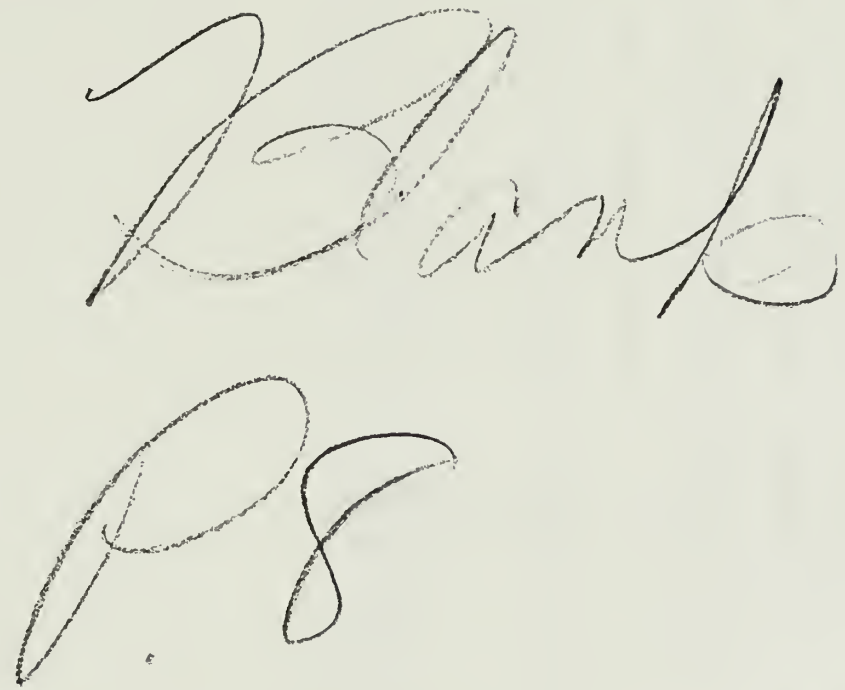

LIST OF FIGURES

1. Two-Port Elements and Their Matrix Characterization- 15

2. Matrix Representation of One-Port and Two-Port Passive Elements and Their Adjoint Transformation -- 16

3. Adjoint Transformation of Time Varying Elements ---- 17

4. Multiple Port Network with Reciprocal Excitation --- 19

5. Original Network N and Its Adjoint $\tilde{N}$ Excited in Reciprocal Manner Time Domain Case ---------- 19

6. Reciprocal Two-Port Networks ---------- 36

7. Reciprocal Two-Port Networks Containing Voltage Dependent Voltage Sources ---------- 41

8. General Interreciprocal Network ---------- 49

9. Sensitivity Models Derived by Application of Tellegen's Theorem and the Mutual Reciprocal Adjoint Network ---------- 49

I. INTRODUCTION

The subject of sensitivity is one of the oldest areas where electrical engineers have made extensive studies. A great amount of research work has been done and in almost every technical journal articles have been published concerning different approaches to network sensitivities. This subject received new impetus when the digital computer was made available to almost every electrical engineer. With the aid of the computer, different approaches to computer aided circuit design have been outlined using sensitivity models or the mutually reciprocal adjoint network.

Starting with the definition of "Interreciprocity," S. W. Director and R. A. Rohrer [Ref. 1-4] developed the idea of automated network design and sensitivity calculations for linear, time invariant, and later for nonlinear, time variant circuits, using the reciprocal adjoint network. The calculations can be carried out in the frequency or in the time domains, although time domain calculations are involved. Computations of the sensitivity due to changes in all network parameters require the simultaneous analysis of two networks, which is easily accomplished with the aid of a digital computer.

The other approach to network sensitivity makes use of sensitivity models as developed and published by J. V. Leeds and G. I. Urgon [Ref. 5]. These results were extended later by S. R. Parker [Ref. 6] to nonlinear time-variant circuits. Using sensitivity models the changes of an output quantity

due to variations of one circuit parameter are easily achieved. For complicated networks the computations of the sensitivity due to changes in all network parameters are more involved. The computations are carried out in the frequency and the time domains equally well.

It is the subject of this thesis to show that both approaches to network sensitivity are not independent. First a careful review of the mutually reciprocal adjoint network is given. As a new result a topological relationship between the original network and its adjoint, including dependent sources and independent sources, is presented as noted. After that the relations and transitions between the adjoint network approach to sensitivities and the sensitivity model are shown. Finally the advantages and disadvantages of both methods are discussed.

II. THE MUTUAL INTERRECIPROCAL ADJOINT NETWORK

The interreciprocity property of an original network N and its mutual adjoint network $\tilde{N}$ is an important extension of the reciprocity theorem used for computation of multi-parameter sensitivities and automated network design. As defined by Director and Rohrer [Ref. 1] the properties are summerized in the following paragraph.

A. THE ADJOINT NETWORK

For any general network N containing arbitrary multi-terminal or two-port elements with parametric representation (lumped parameters), there exists an adjoint network $\tilde{N}$ which has the same topology, but not necessarily the same element types, in corresponding branches.

1. The Linear Time Invariant Case

Director and Rohrer [Ref. 2 and 3] developed the adjoint network $\tilde{N}$ as being identical to the original network with the following exceptions:

a) All gyrators in N with gyration ration, α, become gyrators in $\tilde{N}$ with gyration ration, $-\alpha$, (polarity reversed).

b) All voltage controlled voltage sources in N become current controlled current sources in $\tilde{N}$ and voltage amplification factor, μ, becoming current amplification factor, $-\mu$.

c) All current controlled current sources in N become voltage controlled voltage sources in $\tilde{N}$ with controlling and controlled branches reversed in $\tilde{N}$ and current amplification factor, h, becoming voltage amplification factor, -h.

d) All voltage controlled current sources and current controlled voltage sources have their controlling and controlled branches reversed in $\tilde{N}$.

e) All independent sources are set to zero. For computations of sensitivities of network functions, excitations with unity sources at specified terminals are explained in a later paragraph.

f) In the frequency domain no changes occur in the excitation of the two networks. In the time domain, time in the adjoint network runs backwards.

If the two-port coupling elements such as transformers, gyrators, and dependent sources are defined by algebraic relations among their port voltages and currents, then these relations can be summerized as shown in Fig. 1. The ideal transformer, the voltage controlled voltage source, and the current controlled current source are described by the hybrid matrix. The gyrator is expressed either by the impedance or the admittance matrix. The current controlled voltage source is defined by the impedance matrix, and the voltage controlled current source by the admittance matrix. In Fig. 1 the first subscript is defined as follows:

i - input branch

o - output branch

The second subscript denotes the kind of two-port element and is defined as follows:

μ - voltage dependent voltage source

h - current dependent current source

g - voltage dependent current source

r - current dependent voltage source

n - ideal transformer

α - gyrator

The second subscript is omitted in the matrix representation but will be used later.

Let the voltages and currents belonging to branches in the mutual reciprocal adjoint network be defined by

$$\tilde{V}_{xy} \text{ and } \tilde{I}_{xy}$$

respectively. The subscripts, xy, are explained as used later on.

The transformation of all passive circuit elements from the original network N into its corresponding adjoint $\tilde{N}$ can then be summerized as shown in Fig. 2a and b. These transformations are valid for any linear time invariant network. As stated before, for sensitivity calculations all independent sources in the original and its adjoint network are set to zero.

2. The Linear Time Variant Case

The adjoint network, $\tilde{N}$, of the original network N for the linear time variant case is defined by Director and Rohrer [Ref. 1] as follows:

a) All time invariant elements of N become elements in $\tilde{N}$ as described in the previous paragraph.

b) All time varying resistors, gyrators, transformers, and controlled sources of N are time varying in $\tilde{N}$. The

transformations are according to the rules governing the corresponding time invariant elements.

c) Time varying capacitors, C(t), of N become time varying capacitors, $C(\tau)$, of $\tilde{N}$ shunted by a time varying conductance, $G(\tau)$, in mhos equal to the value of the time derivative of the capacitor.

d) Time varying inductors, L(t), of N become time varying inductors, $L(\tau)$, of $\tilde{N}$ in series with a time varying resistance, $R(\tau)$, in ohms equal to the derivative of L(t) with respect to time.

e) Time varying coupled inductors and their adjoint equivalent are shown in Fig. 3c.

f) In the time domain calculations, time in $\tilde{N}$ runs backwards relative to time in N. If the initial time is defined by t_o, the final time by t_f, and the running time in N by t, then the time in $\tilde{N}$ is given by

$$\tau = t_o + t_f - t \quad ; \quad t_o < t < t_f \tag{1.1}$$

g) The adjoint network for frequency calculations is identical to the adjoint network in the time domain, except there is no backward running time. For the sensitivity calculations the network analyses of both networks has to be carried out at each frequency point simulataneously.

h) All independent sources are set to zero. The network excitations, for specific sensitivities of a network function, are discussed later.

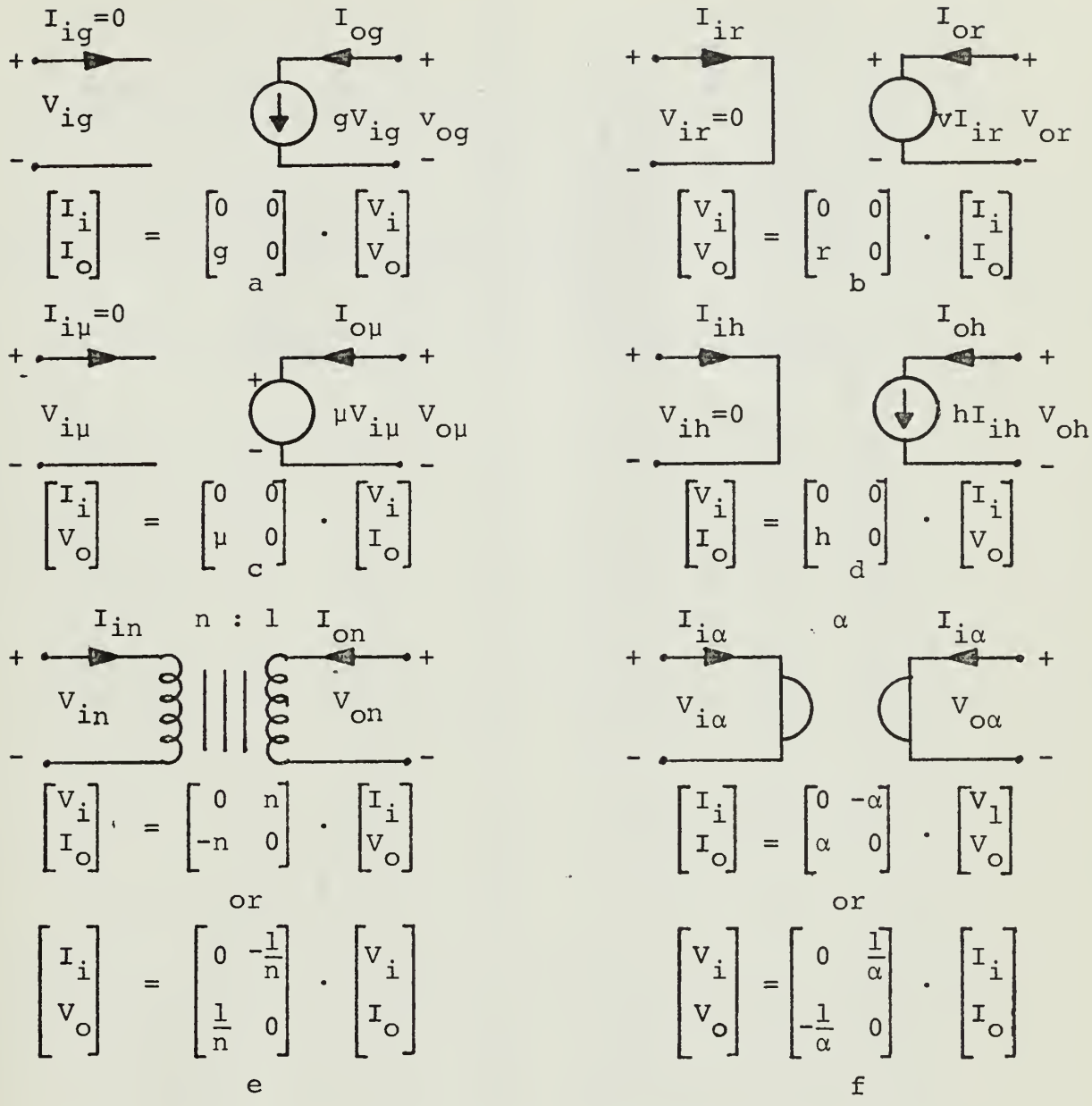
$I_{ig}=0$
I_{og}
V_{ig}
gV_{ig}
v_{og}
$\begin{bmatrix} I_i \\ I_o \end{bmatrix} = \begin{bmatrix} 0 & 0 \\ g & 0 \end{bmatrix} \cdot \begin{bmatrix} V_i \\ V_o \end{bmatrix}$
a
I_{ir}
I_{or}
$V_{ir}=0$
vI_{ir}
V_{or}
$\begin{bmatrix} V_i \\ V_o \end{bmatrix} = \begin{bmatrix} 0 & 0 \\ r & 0 \end{bmatrix} \cdot \begin{bmatrix} I_i \\ I_o \end{bmatrix}$
b
$I_{i\mu}=0$
$I_{o\mu}$
$V_{i\mu}$
$\mu V_{i\mu}$
$V_{o\mu}$
$\begin{bmatrix} I_i \\ V_o \end{bmatrix} = \begin{bmatrix} 0 & 0 \\ \mu & 0 \end{bmatrix} \cdot \begin{bmatrix} V_i \\ I_o \end{bmatrix}$
c
I_{ih}
I_{oh}
$V_{ih}=0$
hI_{ih}
V_{oh}
$\begin{bmatrix} V_i \\ I_o \end{bmatrix} = \begin{bmatrix} 0 & 0 \\ h & 0 \end{bmatrix} \cdot \begin{bmatrix} I_i \\ V_o \end{bmatrix}$
d
I_{in}
n : 1
I_{on}
V_{in}
V_{on}
$\begin{bmatrix} V_i \\ I_o \end{bmatrix} = \begin{bmatrix} 0 & n \\ -n & 0 \end{bmatrix} \cdot \begin{bmatrix} I_i \\ V_o \end{bmatrix}$
or
$\begin{bmatrix} I_i \\ V_o \end{bmatrix} = \begin{bmatrix} 0 & -\frac{1}{n} \\ \frac{1}{n} & 0 \end{bmatrix} \cdot \begin{bmatrix} V_i \\ I_o \end{bmatrix}$
e
$I_{i\alpha}$
α
$I_{i\alpha}$
$V_{i\alpha}$
$V_{o\alpha}$
$\begin{bmatrix} I_i \\ I_o \end{bmatrix} = \begin{bmatrix} 0 & -\alpha \\ \alpha & 0 \end{bmatrix} \cdot \begin{bmatrix} V_1 \\ V_o \end{bmatrix}$
or
$\begin{bmatrix} V_i \\ V_o \end{bmatrix} = \begin{bmatrix} 0 & \frac{1}{\alpha} \\ -\frac{1}{\alpha} & 0 \end{bmatrix} \cdot \begin{bmatrix} I_i \\ I_o \end{bmatrix}$
f

Figure 1: Two-Port Elements and their Matrix Characterization
a) Voltage Dependent Current Source
b) Current Dependent Voltage Source
c) Voltage Dependent Voltage Source
d) Current Dependent Current Source
e) Ideal Transformer
f) Gyrator
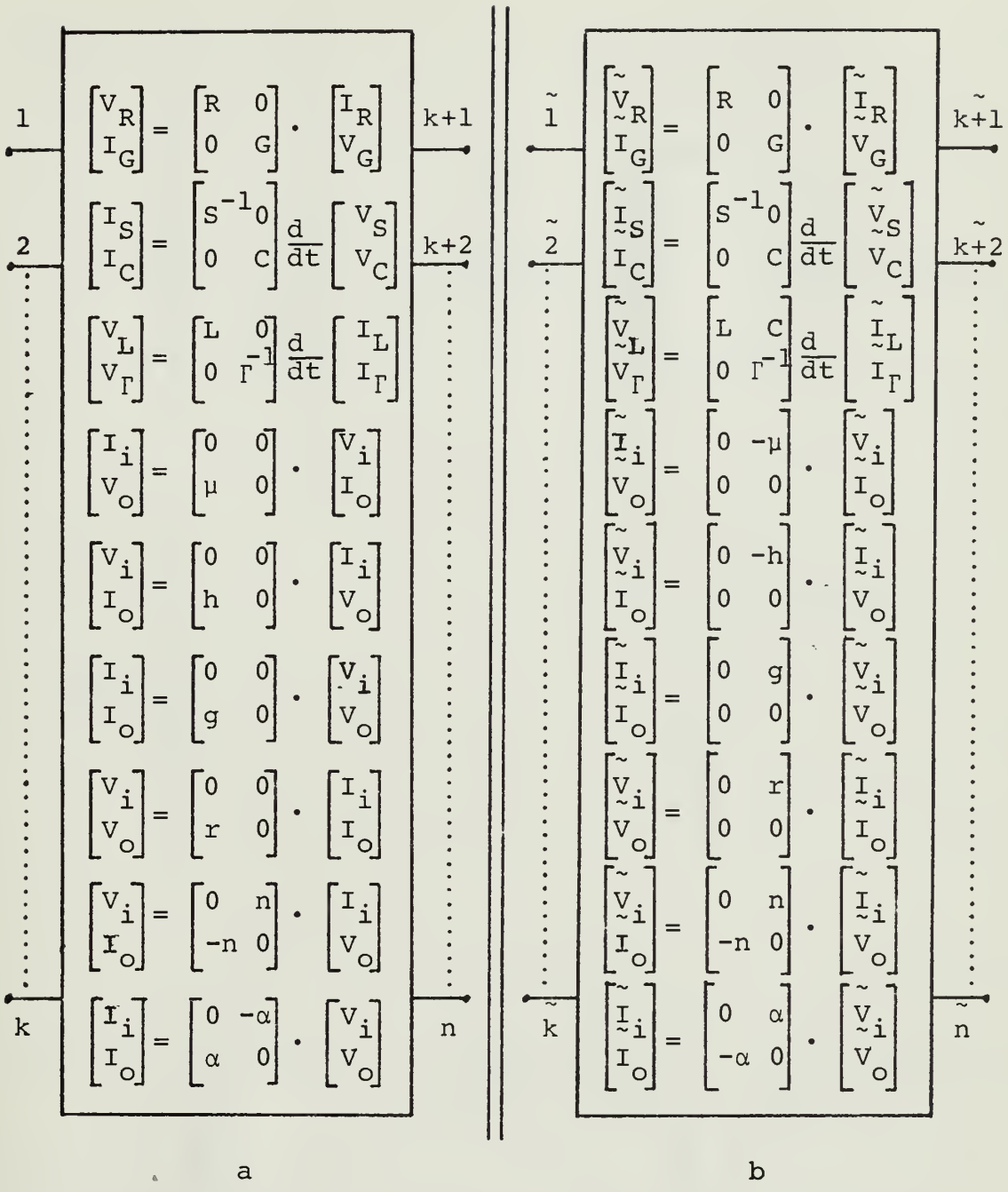
Figure 2: Matrix Representation of One-Port and Two-Port Passive Elements and their Adjoint Transformation
a) Original Network
b) Mutual Reciprocal Adjoint Network

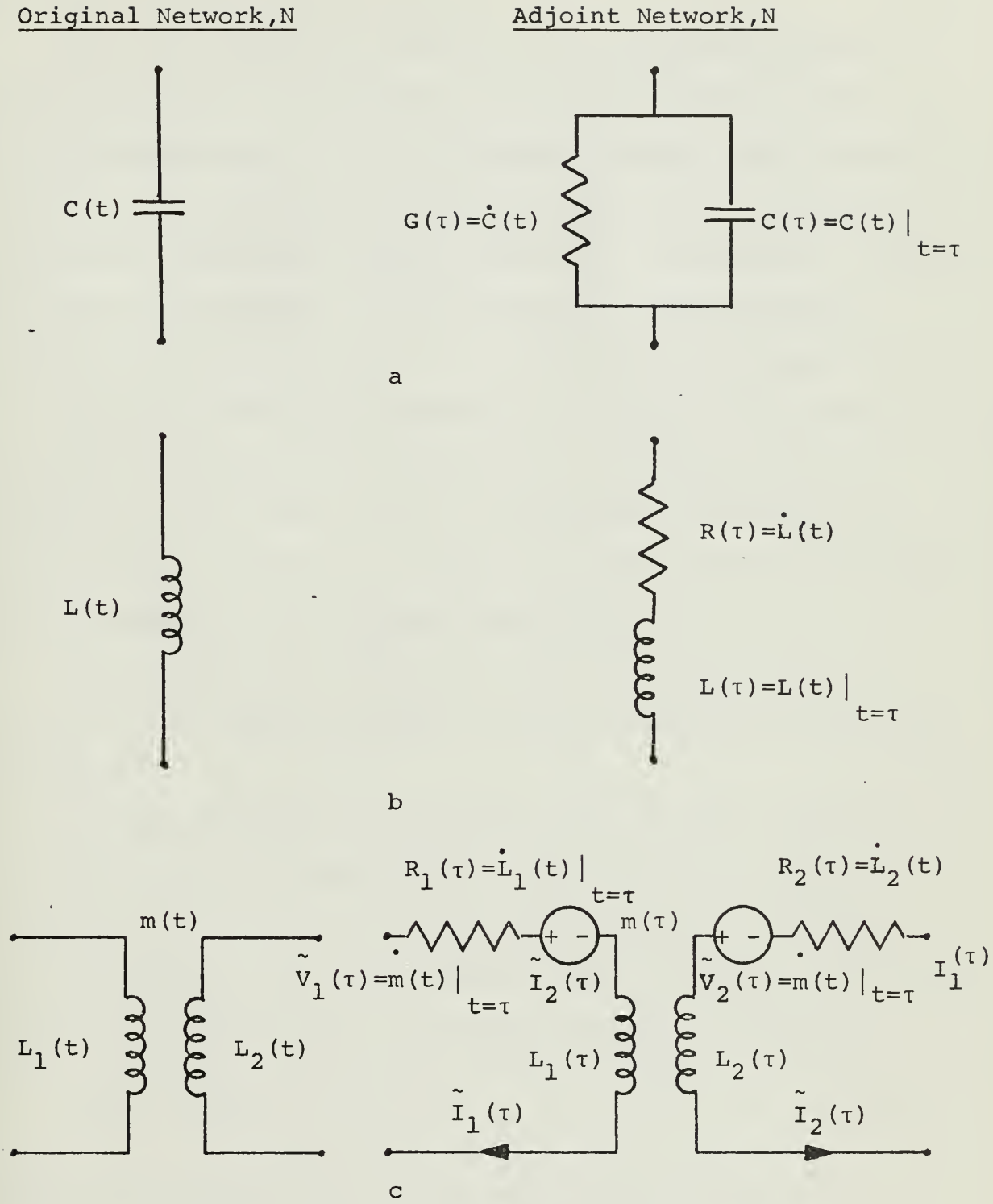

Figure 3: Adjoint Transofrmation of Time Varying Elements
a) Capacitor
b) Inductor
c) Coupled Inductors

B. THE INTERRECIPROCAL THEOREM

The interreciprocal property of an original network N and its adjoint $\tilde{N}$ as defined by Director and Rohrer [Ref. 1] is a generalization of the reciprocity theorem. This extension applies to a network and its adjoint consisting of resistors, capacitors, inductors, coupled inductors, transformers, gryators and controlled sources. The reciprocity theorem defines a network to be reciprocal if it has the following property:

If an excitation E_g is applied at one pair of terminals in N and a response I_2 is measured at some second pair of terminals of the same network, interchanging the points of excitation and response, keeping E_g the same, does not change the response I_2 at the original port (Fig. 4).

An original n-port network N and its n-port adjoint $\tilde{N}$ are said to be interreciprocal if the following conditions are satisfied:

Considering first the frequency domain case. For any excitation $E_k(s)$ at some terminal pair k of the original network N the response at another terminal pair n is $I_n(s)$. The excitation at all other ports is zero. Exciting the adjoint network at terminal pair n with the sour $\tilde{V}_n(s)$ such that

$$\tilde{V}_n(s) = E_k(s) \tag{1.2}$$

yields the response

$$\tilde{I}_k(s) = I_n(s) \tag{1.3}$$

at terminal pair k of $\tilde{N}$.

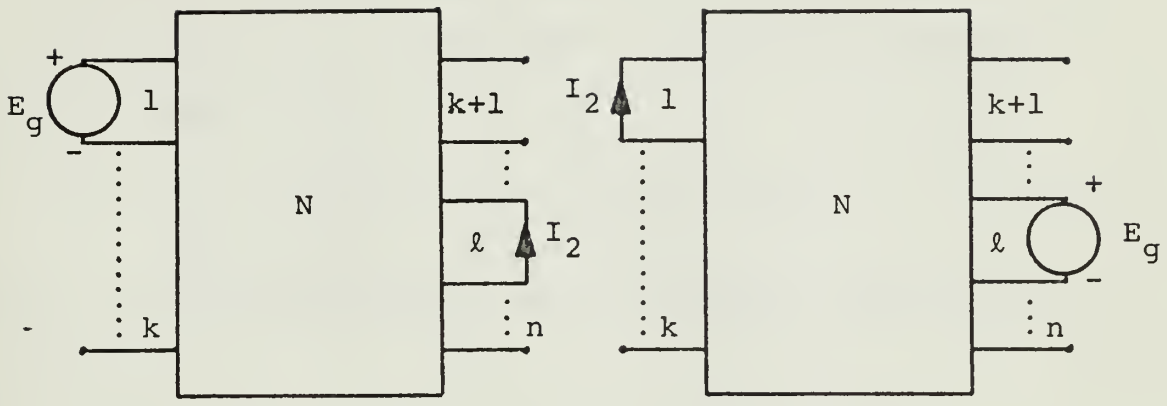

Figure 4: Multiple port Network with Reciprocal Excitation

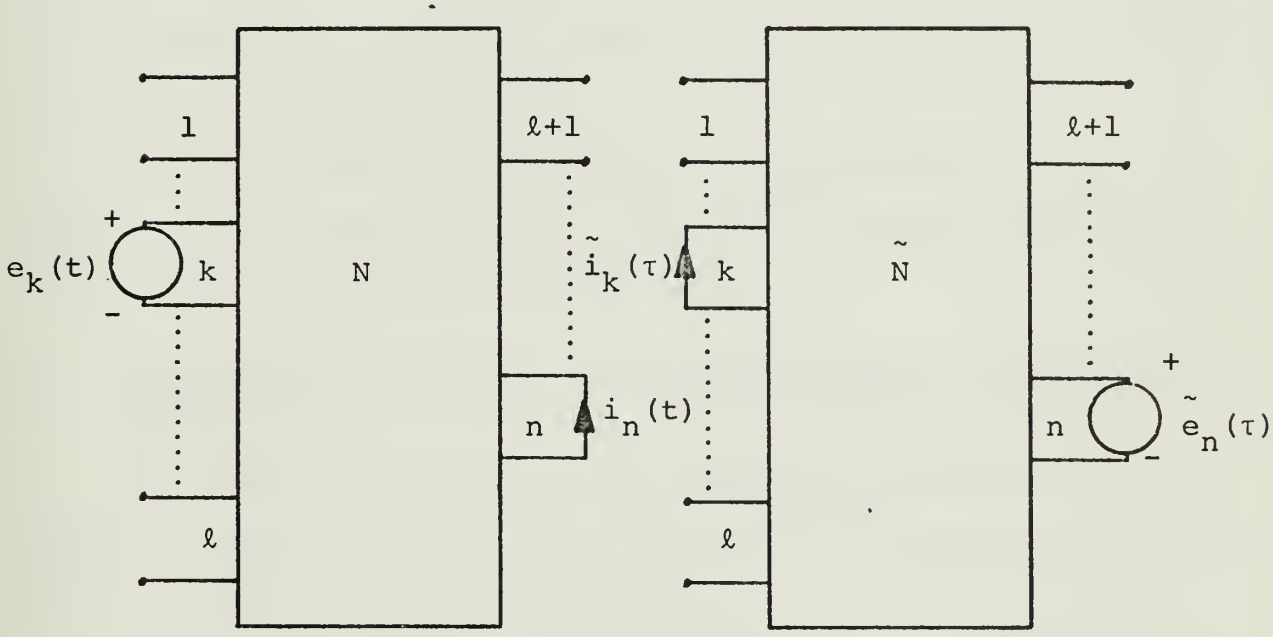

Figure 5: Original Network N and its Adjoint $\tilde{N}$ excited in Reciprocal Manner. Time Domain Case

For time domain considerations let the excitation voltage at port k of N be $e_k(t)$ which forces a current response $i_n(t)$ at the terminal pair n. Exciting the adjoint at its port n with a voltage source

$$\tilde{V}_n(t)\Big|_{t=\tau} = e_k(t) \quad ; \quad \tau = t_o + t_f - t \tag{1.4}$$

yields the current response $\tilde{i}_k(\tau)$ at terminal pair k of $\tilde{N}$ such that

$$\tilde{i}_k(t)\Big|_{t=\tau} = i_n(t) \tag{1.5}$$

The voltage and current excitations at all other terminal pairs are zero (Fig. 5). If these conditions (1.2 through 1.5) apply to all possible pairs of terminals of both networks then they are said to be interreciprocal.

One sufficient condition for an original network and its adjoint to be interreciprocal is that the circuit consist of linear time invariant parameters only.

C. DEFINITION OF THE ADJOINT NETWORK IN TERMS OF TOPOLOGICAL RELATIONSHIPS

The interreciprocity theorem applied to a network and its adjoint, implies certain restrictions on the transformation of elements from one circuit to the other. It results in very strict relationships between the original network and its adjoint. As discussed by Parker and Barmes [Ref. 7] the branch relations of the original network can be expressed by the following matrix equation

$$\begin{bmatrix} M_1 & Z_1 \\ Y_1 & L_1 \end{bmatrix} \cdot \begin{bmatrix} v_1 \\ i_2 \end{bmatrix} = \begin{bmatrix} Z & M \\ L & Y \end{bmatrix} \cdot \begin{bmatrix} i_1 \\ v_2 \end{bmatrix} + \begin{bmatrix} e \\ j \end{bmatrix} \tag{2.1}$$

where v_1 and i_1 are defined as link voltages and currents, respectively. v_2 and i_2 are branch voltages and currents, respectively. They are defined by the following vectors

$$v_1 = \begin{bmatrix} v_S \\ v_R \\ v_L \end{bmatrix} \quad \text{and} \quad i_1 = \begin{bmatrix} i_S \\ i_R \\ i_L \end{bmatrix} \tag{2.2}$$

$$v_2 = \begin{bmatrix} v_C \\ v_G \\ v_\Gamma \end{bmatrix} \quad \text{and} \quad i_2 = \begin{bmatrix} i_C \\ i_G \\ i_\Gamma \end{bmatrix} \tag{2.3}$$

where the subscripts denote the following:

C - tree branch capacitances

G - tree branch conductances

Γ - tree branch (excess) inverse inductors

S - link (excess) susceptances

R - link resistors

L - link inductors

Independent sources consist of voltage and current sources as defined by the following vectors:

$$e = \begin{bmatrix} e_S \\ e_R \\ e_L \end{bmatrix} \quad \text{and} \quad j = \begin{bmatrix} j_C \\ j_G \\ j_\Gamma \end{bmatrix} \tag{2.4}$$

where e_S, e_R, and e_L are independent voltage sources contained in fundamental loops defined by susceptances, resistors, or inductors, respectively. j_C, j_G, and j_Γ are independent current sources associated with fundamental cutsets defined by capacitors, conductors or inverse inductors, respectively. The latter can be neglected in the adjoint network because all independent sources are set to zero. Only indpendent sources relevant to the computation of the sensitivity are inserted. These appear as unity sources in a reciprocal manner in the original network and its adjoint as discussed later.

The two partitioned square matrices (2.1) contain various elements as follows:

$$M_1 = [(\mu_1 + I)] \qquad Z_1 = [r_1]$$
$$Y_1 = [g_1] \qquad L_1 = [(h_1 + I)] \qquad (2.5a,b,c,d)$$

and

$$Z = [r] \qquad M = [(\mu + F)]$$
$$L = [(h - F^t)] \qquad Y = [g] \qquad (2.6a,b,c,d)$$

where

- M_1 consists of voltage dependent voltage sources plus the identity matrix
- Z_1 contains current dependent voltage sources
- Y_1 is composed of voltage controlled current sources
- L_1 consists of current dependent current sources plus the identity matrix
- Z contains the remaining current dependent voltage sources

M contains the other part of voltage dependent voltage sources plus partitioned topological F matrix elements

L consists of further current dependent current sources plus the negative transposed elements of F

Y is composed of all remaining voltage controlled current sources. Using (2.2) (2.3) (2.5), and (2.6) in (2.1) with e = j = 0 yields

$$\left[\begin{array}{c|c} \begin{bmatrix} \mu_{SS} & \mu_{SR} & \mu_{SL} \\ \mu_{RS} & \mu_{RR} & \mu_{RL} \\ \mu_{LS} & \mu_{LR} & \mu_{LL} \end{bmatrix} & \begin{bmatrix} r_{SC} & r_{SG} & r_{S\Gamma} \\ r_{RC} & r_{RG} & r_{R\Gamma} \\ r_{LC} & r_{LG} & r_{L\Gamma} \end{bmatrix} \\ \hline \begin{bmatrix} g_{CS} & g_{CR} & g_{CL} \\ g_{GS} & g_{GR} & g_{GL} \\ g_{\Gamma S} & g_{\Gamma R} & g_{\Gamma L} \end{bmatrix} & \begin{bmatrix} h_{CC} & h_{CG} & h_{C\Gamma} \\ h_{GC} & h_{GG} & h_{G\Gamma} \\ h_{\Gamma C} & h_{\Gamma G} & h_{\Gamma\Gamma} \end{bmatrix} \end{array}\right] + \left[\begin{array}{c|c} I & 0 \\ \hline 0 & I \end{array}\right] \cdot \begin{bmatrix} v_S \\ v_R \\ v_L \\ \hline i_C \\ i_G \\ i_\Gamma \end{bmatrix} =$$

$$\left[\begin{array}{c|c} \begin{bmatrix} r_{SS} & r_{SR} & r_{SL} \\ r_{RS} & r_{RR} & r_{RL} \\ r_{LS} & r_{LR} & r_{LL} \end{bmatrix} & \begin{bmatrix} \mu_{SC} & \mu_{SG} & \mu_{S\Gamma} \\ \mu_{RC} & \mu_{RG} & \mu_{R\Gamma} \\ \mu_{LC} & \mu_{LG} & \mu_{L\Gamma} \end{bmatrix} \\ \hline \begin{bmatrix} h_{CS} & h_{CR} & h_{CL} \\ h_{GS} & h_{GR} & h_{GL} \\ h_{\Gamma S} & h_{\Gamma R} & h_{\Gamma L} \end{bmatrix} & \begin{bmatrix} g_{CC} & g_{CG} & g_{C\Gamma} \\ g_{GC} & g_{GG} & g_{G\Gamma} \\ g_{\Gamma C} & g_{\Gamma G} & g_{\Gamma\Gamma} \end{bmatrix} \end{array}\right] + \left[\begin{array}{c|c} \begin{bmatrix} 0 & 0 & 0 \\ 0 & 0 & 0 \\ 0 & 0 & 0 \end{bmatrix} & \begin{bmatrix} F_{SC} & 0 & 0 \\ F_{RC} & F_{RG} & 0 \\ F_{LC} & F_{LG} & F_\Gamma \end{bmatrix} \\ \hline \begin{bmatrix} -F^t_{SC} & -F^t_{RC} & -F^t_{LC} \\ 0 & -F^t_{RG} & -F^t_{LG} \\ 0 & 0 & -F^t_\Gamma \end{bmatrix} & \begin{bmatrix} 0 & 0 & 0 \\ 0 & 0 & 0 \\ 0 & 0 & 0 \end{bmatrix} \end{array}\right] \cdot \begin{bmatrix} i_S \\ i_R \\ i_L \\ \hline v_C \\ v_G \\ v_\Gamma \end{bmatrix}$$

(2.7)

where the double subscripts indicate the kind of elements between which the dependency exists.

The basic transformation from the original to the adjoint contains no changes for all passive circuit parameters. Voltage

controlled voltage sources become current controlled current sources with current amplification factor, $-\mu$, with the roles of controlling and dependent branches reversed. This operation corresponds to the following matrix manipulation

$$\begin{bmatrix} \underset{\sim}{\mu}_1 \\ \hline \end{bmatrix} \rightarrow \begin{bmatrix} \\ \hline -\underset{\sim}{\mu}_1^t \end{bmatrix} \tag{2.8}$$

and

$$\begin{bmatrix} \underset{\sim}{\mu} \\ \hline \end{bmatrix} \rightarrow \begin{bmatrix} \\ \hline -\underset{\sim}{\mu}^t \end{bmatrix} \tag{2.9}$$

A similar transformation holds for current dependent current sources so that

$$\begin{bmatrix} \\ \hline \underset{\sim}{h}_1 \end{bmatrix} \rightarrow \begin{bmatrix} -\underset{\sim}{h}_1^t \\ \hline \end{bmatrix} \tag{2.10}$$

and

$$\begin{bmatrix} \\ \hline \underset{\sim}{h} \end{bmatrix} \rightarrow \begin{bmatrix} -\underset{\sim}{h}^t \\ \hline \end{bmatrix} \tag{2.11}$$

Voltage dependent current sources and current dependent voltage sources with amplification factor, g, and amplification factor, r, respectively remain, but in both cases the roles of depending and controlling branches are reversed. This operation corresponds to the transposition of the corresponding submatrices so that

$$\left[\begin{array}{c|c} & \underset{\sim}{r}_1 \\ \hline \underset{\sim}{g}_1 & \end{array}\right] \longrightarrow \left[\begin{array}{c|c} & \underset{\sim}{r}_1^t \\ \hline \underset{\sim}{g}_1^t & \end{array}\right] \tag{2.12}$$

and

$$\left[\begin{array}{c|c} \underset{\sim}{r} & \\ \hline & \underset{\sim}{g} \end{array}\right] \longrightarrow \left[\begin{array}{c|c} \underset{\sim}{r}^t & \\ \hline & \underset{\sim}{g}^t \end{array}\right] \tag{2.13}$$

Equation (2.1) in partitioned form and omitted independent sources gives

$$\left[\begin{bmatrix} \mu_1 & r_1 \\ g_1 & h_1 \end{bmatrix} + [I]\right] \cdot \begin{bmatrix} v_1 \\ i_2 \end{bmatrix} = \left[\begin{bmatrix} r & \mu \\ h & g \end{bmatrix} + \begin{bmatrix} 0 & F \\ -F^t & 0 \end{bmatrix}\right] \cdot \begin{bmatrix} i_1 \\ v_2 \end{bmatrix} \tag{2.14}$$

Using the matrix transformation as shown in (2.8) through (2.13) in (2.14) yields the branch relations of the mutual reciprocal adjoint network

$$\left[\begin{bmatrix} -h_1^t & r_1^t \\ g_1^t & -\mu_1^t \end{bmatrix} + [I]\right] \cdot \begin{bmatrix} v_1 \\ i_2 \end{bmatrix} = \left[\begin{bmatrix} r^t & -h^t \\ -\mu^t & g^t \end{bmatrix} + \begin{bmatrix} 0 & F \\ -F^t & 0 \end{bmatrix}\right] \cdot \begin{bmatrix} i_1 \\ v_2 \end{bmatrix} \tag{2.15}$$

Rearranging and using (2.5) and (2.6) in (2.15) gives the final result

$$\begin{bmatrix} -L_1^t & Z_1^t \\ Y_1^t & -M_1^t \end{bmatrix} \cdot \begin{bmatrix} v_1 \\ i_2 \end{bmatrix} = \begin{bmatrix} Z^t & -L^t \\ -M^t & Y^t \end{bmatrix} \cdot \begin{bmatrix} i_1 \\ v_2 \end{bmatrix} \tag{2.16}$$

Compared with (2.1) shows an easy and compact relationship between the original network and its adjoint.

D. USE OF THE ADJOINT NETWORK FOR SENSITIVITY CALCULATIONS

R. A. Rohrer and S. W. Director [Ref. 1, 2, and 4] have shown that the sensitivity of any network function with respect to changes of one or all network parameters requires the analysis of the original circuit and its mutual reciprocal adjoint.

If any network function is denoted by H(jw), then inserting current or voltage sources of one ampere or one volt, respectively, at particular ports of N and $\tilde{N}$, excited in a reciprocal manner, H(jw) becomes a network function as shown in Table 1.

TABLE 1. Definition of the Network Emmittance Function.

$H_{(jw)}$	Terminal Conditions Original Network N		Terminal Conditions Adjoint Network $\tilde{N}$	
	port k	port l	port k	port l
Driving Point Impedance at port k	Current source (1 amp)	Open or Short	Current source (1amp)	Open or Short
Driving Point Admittance at port k	Voltage source (1volt)	Open or Short	Voltage source (1volt)	Open or Short
Transfer Impedance between port k and l	Open	Current source (1amp)	Current source (1amp)	Open
Transfer Admittance between port k and l	Short	Voltage source (1volt)	Voltage source (1volt)	Short
Current Transfer Ratio	Current source (1amp)	Short	Short	Voltage source (1volt)
Voltage Transfer Ratio between port k and l	Voltage source (1 volt)	Open	Open	Current Source (1 amp)

The normalized sensitivity (due to the insertion of unity current or voltage sources) of any network function (as defined in TABLE 1) with respect to all element types, is obtained in terms of voltage and/or current responses in the corresponding branches of N and $\tilde{N}$. The sensitivities are defined in TABLE 2.

TABLE 2. Sensitivities of a Network Function

Variable Network Parameter	Sensitivity of Network Function
Resistances	$\frac{\partial H}{\partial R} = -I_R(jw) \cdot \tilde{I}_R(jw)$
Conductances	$\frac{\partial H}{\partial G} = V_G(jw) \cdot \tilde{V}_G(jw)$
Inductances	$\frac{\partial H}{\partial L} = -jwI_L(jw) \cdot \tilde{I}_L(jw)$
Reciprocal Inductances	$\frac{\partial H}{\partial \Gamma} = 1/[jwV_\Gamma(jw) \cdot \tilde{V}_\Gamma(jw)]$
Capacitances	$\frac{\partial H}{\partial C} = jwV_C(jw) \cdot \tilde{V}_C(jw)$
Elastances	$\frac{\partial H}{\partial S} = -1/[jwI_S(jw) \cdot \tilde{I}_S(jw)]$
Transformers (turns ratio n:1)	$\frac{\partial H}{\partial n} = (I_{on}(jw) \cdot \tilde{V}_{in}(jw) + V_{in}(jw) \cdot \tilde{I}_{on}(jw))$
Gyrators (gyration ratio: α)	$\frac{\partial H}{\partial \alpha} = + (I_{i\alpha}(jw) \cdot \tilde{I}_{o\alpha}(jw) - I_{o\alpha}(jw) \cdot \tilde{I}_{i\alpha}(jw))$
Voltage controlled voltage sources (voltage amplification ratio: μ)	$\frac{\partial H}{\partial \mu} = -V_{i\mu}(jw) \cdot \tilde{I}_{o\mu}(jw)$
Voltage controlled current sources (transconductance: g)	$\frac{\partial H}{\partial g} = V_{ig}(jw) \cdot \tilde{V}_{og}(jw)$
Current controlled current sources (current amplification ratio: h)	$\frac{\partial H}{\partial h} = I_{ih}(jw) \cdot \tilde{V}_{oh}(jw)$
Current controlled voltage source (transresistance: r)	$\frac{\partial H}{\partial r} = -I_{ir}(jw) \cdot \tilde{I}_{or}(jw)$

III. SENSITIVITY MODELS

The sensitivity model approach to network sensitivities for linear circuits was developed by J. V. Leeds and G. I. Urgon [Ref. 5] based upon an idea first presented by R. Tomovic [Ref. 8]. These results were extended to nonlinear circuits by S. R. Parker [Ref. 6]. In general, the sensitivity model is topologically identical to the original circuit. All independent sources are reduced to zero. An excitation voltage or current source, depending on the variable parameter, x, has to be placed in series or in parallel with x, in such a direction as to oppose the normal current flow in that branch. The value of that source depends upon the current or voltage response of the branch of x in the original network. The responses of the sensitivity model are in turn the required sensitivity function.

A. DEFINITION FOR THE LINEAR CASE

For the different element types the sensitivity model equivalent element and its corresponding excitation is summerized in Table 3 as taken from S. R. Parker [Ref. 6].

TABLE 3. Sensitivity Models and their Excitations for the Linear Network

a) RESISTIVE ELEMENT

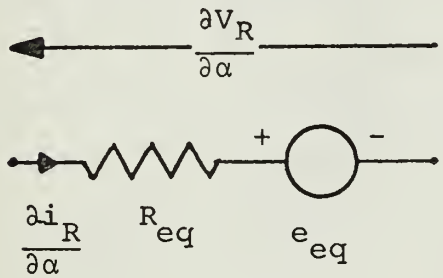

$$R_{eq} = R_1$$

$$e_{eq} = i_R$$

$$v_R = R_1 i_R = i_R$$

b) CONDUCTIVE ELEMENT

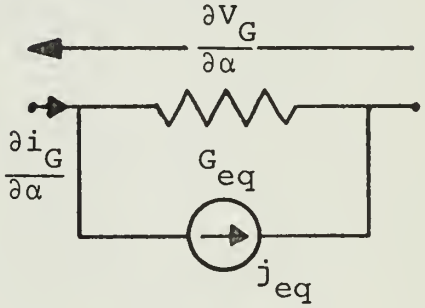

$$G_{eq} = G_2$$

$$j_{eq} = v_G$$

$$i_G = G_2 v_G = v_G$$

c) CAPACITIVE ELEMENT

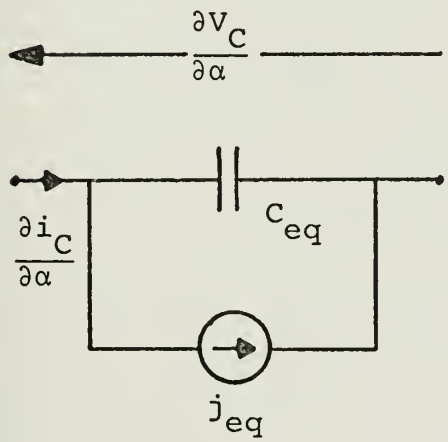

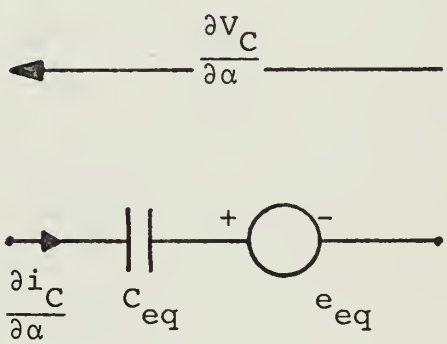

$$C_{eq} = C_2$$

$$j_{eq} = \frac{\partial v_C}{\partial t} \qquad i = \frac{d}{dt}\,(C_2 v_C) \qquad e_{eq} = \frac{1}{C_2}\frac{\partial v_C}{\partial t}$$

d) INDUCTIVE ELEMENT (WITH MUTUAL COUPLING)

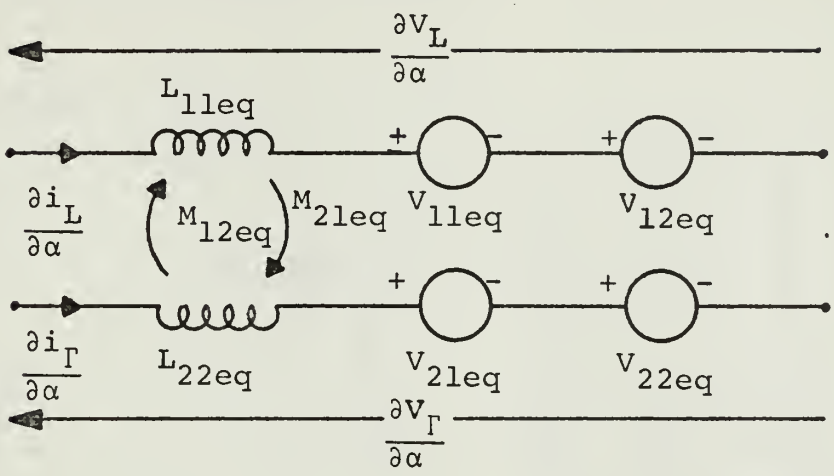

$$L_{11eq} = L_{11} \qquad v_{11eq} = \frac{di_L}{dt}$$

$$M_{12eq} = L_{12} \qquad v_{12eq} = \frac{di_\Gamma}{dt}$$

$$M_{21eq} = L_{21} \qquad v_{21eq} = \frac{di_L}{dt}$$

$$L_{22eq} = L_{22} \qquad v_{22eq} = \frac{di_\Gamma}{dt}$$

$$v_L = \frac{d}{dt}\left(L_{11}i_L + L_{12}i_\Gamma\right)$$

$$v_\Gamma = \frac{d}{dt}\left(L_{21}i_L + L_{22}i_\Gamma\right)$$

e) RESISTIVE HYBRID ELEMENT

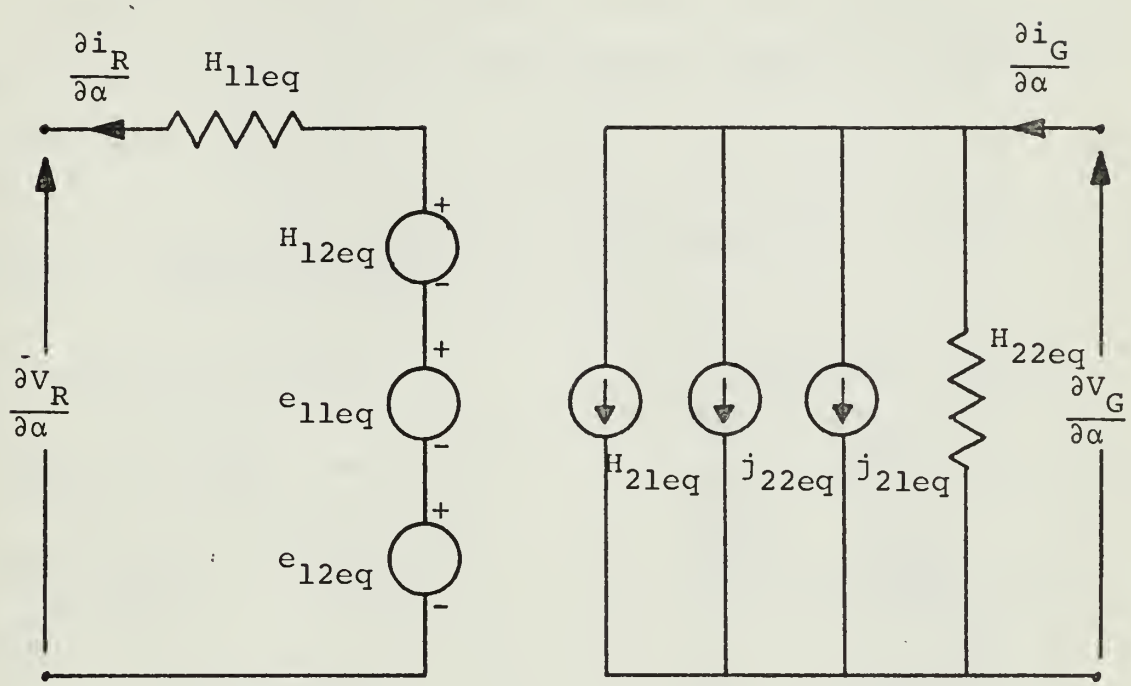

$$H_{11eq} = H_{11} \qquad H_{22eq} = H_{22}$$

$$H_{12eq} = H_{12} \qquad H_{21eq} = H_{21}$$

$$e_{11eq} = i_R \qquad j_{22eq} = V_G$$

$$e_{12eq} = v_G \qquad j_{21eq} = i_R$$

$$v_R = H_{11} i_R + H_{12} v_G$$

$$i_G = H_{21} i_R + H_{22} v_G$$

B. DEFINITION FOR THE NONLINEAR CASE

For the nonlinear circuit the sensitivity model equivalents and their excitations are summerized in TABLE 4 as taken from S. R. Parker [Ref. 6].

TABLE 4. Sensitivity Model and Their Excitation for the Nonlinear Case

a) RESISTIVE ELEMENT

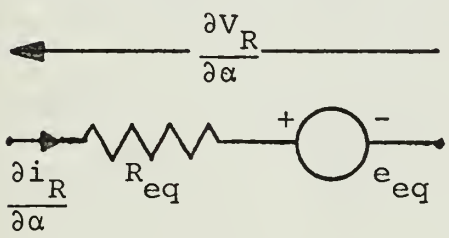

$$R_{eq} = \frac{\partial v_R(i_R,\alpha)}{\partial i_R}$$

$$e_{eq} = \frac{\partial v_R(i_R,\alpha)}{\partial \alpha}$$

$$v_R = v_R(i_R,\alpha)$$

b) CONDUCTIVE ELEMENT

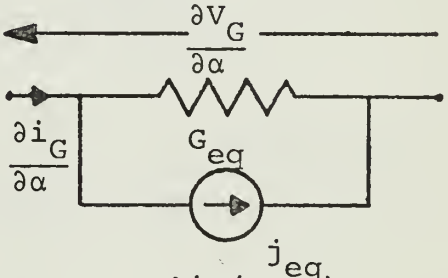

$$G_{eq} = \frac{\partial i_G(v_G,\alpha)}{\partial v_G}$$

$$j_{eq} = \frac{\partial i_G(v_G,\alpha)}{\partial \alpha}$$

$$i_G = i_G(v_G,\alpha)$$

c) CAPACITIVE ELEMENT

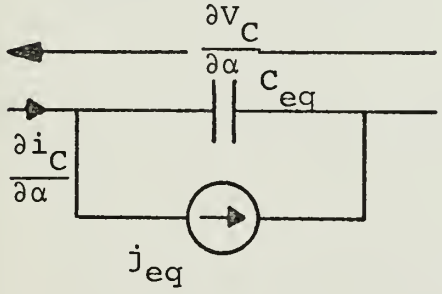

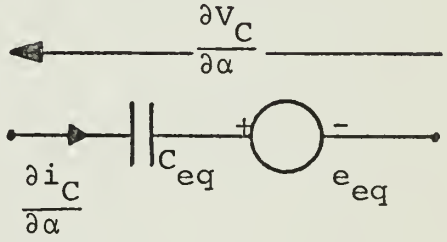

$$C_{eq} = \frac{\partial Q(v_C,\alpha)}{\partial v_C}$$

$$j_{eq} = \frac{\partial}{\partial t}\left(\frac{\partial Q(v_C,\alpha)}{\partial \alpha}\right) \qquad e_{eq} = C_{eq}^{-1}\left(\frac{\partial Q(v_C,\alpha)}{\partial \alpha}\right)$$

$$i_C = \frac{\partial}{\partial t} Q(v_C,\alpha)$$

d) INDUCTIVE ELEMENT (WITH MUTUAL COUPLING)

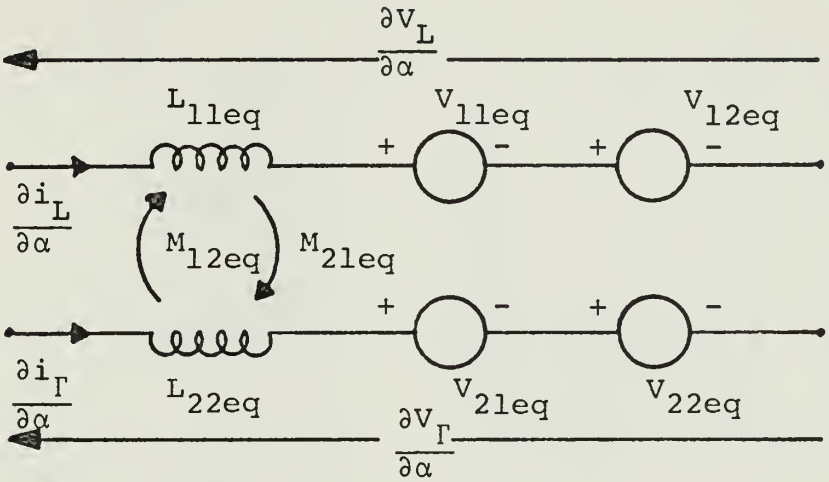

$$L_{11eq} = \frac{\partial \phi_{11}(i_L,\alpha)}{\partial i_L} \qquad v_{11eq} = \frac{\partial}{\partial t}\left(\frac{\partial \phi_{11}(i_L,\alpha)}{\partial \alpha}\right)$$

$$M_{12eq} = \frac{\partial \phi_{12}(i_\Gamma,\alpha)}{\partial i_\Gamma} \qquad v_{12eq} = \frac{\partial}{\partial t}\left(\frac{\partial \phi_{12}(i_\Gamma,\alpha)}{\partial \alpha}\right)$$

$$M_{21eq} = \frac{\partial \phi_{21}(i_L,\alpha)}{\partial i_L} \qquad v_{21eq} = \frac{\partial}{\partial t}\left(\frac{\partial \phi_{21}(i_L,\alpha)}{\partial \alpha}\right)$$

$$L_{22eq} = \frac{\partial \phi_{22}(i_\Gamma,\alpha)}{\partial i_\Gamma} \qquad v_{22eq} = \frac{\partial}{\partial t}\left(\frac{\partial \phi_{22}(i_\Gamma,\alpha)}{\partial \alpha}\right)$$

$$v_L = \frac{\partial}{\partial t}\left[\phi_{11}(i_L,\alpha) + \phi_{12}(i_\Gamma,\alpha)\right]$$

$$v_\Gamma = \frac{\partial}{\partial t}\left[\phi_{21}(i_L,\alpha) + \phi_{22}(i_\Gamma,\alpha)\right]$$

e) RESISTIVE HYBRID ELEMENT

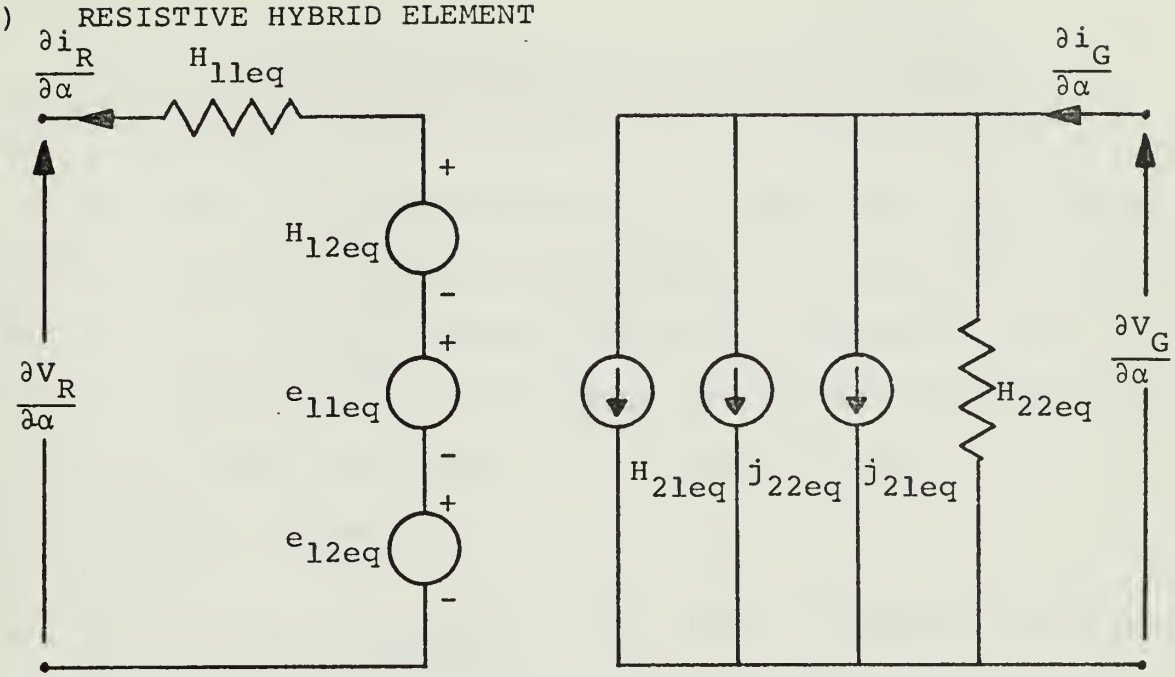

$$H_{11eq} = \frac{\partial h_{11}(i_R,\alpha)}{\partial v_G} \qquad H_{22eq} = \frac{\partial h_{22}(v_G,\alpha)}{\partial v_G}$$

$$H_{12eq} = \frac{\partial h_{12}(v_G,\alpha)}{\partial v_G}\left(\frac{\partial v_G}{\partial \alpha}\right) \qquad H_{21eq} = \frac{\partial h_{21}(i_R,\alpha)}{\partial i_R}\left(\frac{\partial i_R}{\partial \alpha}\right)$$

$$e_{11eq} = \frac{\partial h_{11}(i_R,\alpha)}{\partial \alpha} \qquad j_{22eq} = \frac{\partial h_{22}(v_G,\alpha)}{\partial \alpha}$$

$$e_{12eq} = \frac{\partial h_{12}(v_G,\alpha)}{\partial \alpha} \qquad j_{21eq} = \frac{\partial h_{21}(i_R,\alpha)}{\partial \alpha}$$

$$v_R = h_{11}(i_R,\alpha) + h_{12}(v_G,\alpha)$$

$$i_G = h_{21}(i_R,\alpha) + h_{22}(v_G,\alpha)$$

IV. RELATIONSHIP BETWEEN THE SENSITIVITY MODEL AND THE MUTUAL ADJOINT NETWORK APPROACH TO SENSITIVITY

To compare the two methods it is first shown how network sensitivities are obtained using Tellegen's theorem in conjunction with an original network, the mutual reciprocal adjoint, and the augmented original network. Following this derivation, sensitivity models are shown to be a special case of the mutual adjoint network.

A. PROOF OF NETWORK SENSITIVITIES USING THE ADJOINT NETWORK AND TELLEGEN'S THEOREM

In chapter II it was stated that the sensitivity of a network function is obtained using the response of an original network and its adjoint. A proof is presented now.

Consider the network of Fig. 6a, excited with a voltage source E_g at port 1. At port 2 the voltage response is V_2. Fig. 6b represents the same circuit with all of the elements augmented. It is excited with an identical voltage source E_g at port 1. The voltage response at port 2 is $V_2 + \Delta V_2$. Fig. 6c represents the adjoint of the original circuit excited in reciprocal manner. In Fig. 6, X_α, represents any kind of one-port passive network parameter. To apply Tellegen's theorem, the port voltages and currents of the augmented original circuit and the adjoint network are tabulated as follows:

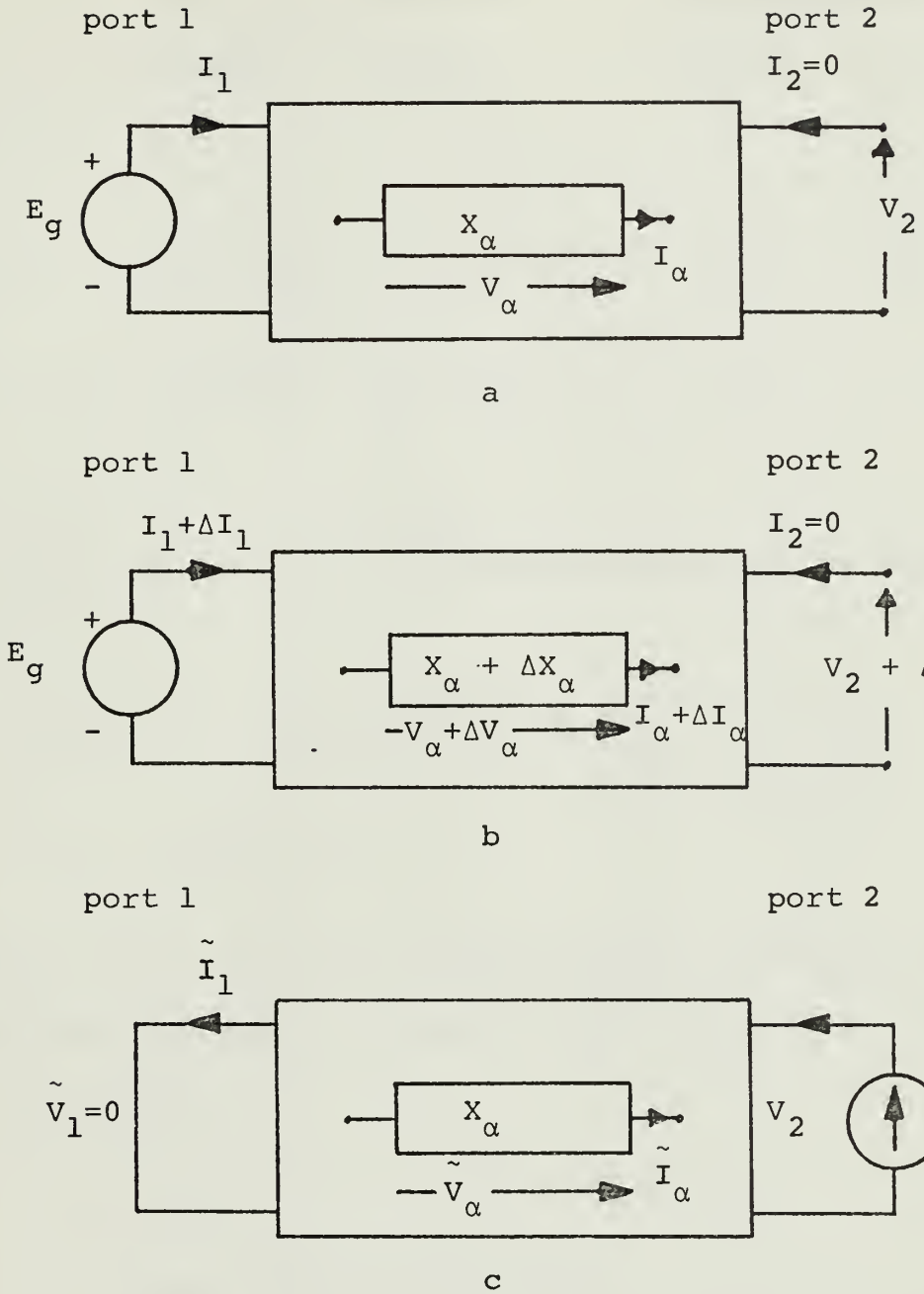

Figure 6: Reciprocal Two Port Networks
a) Original Network,N
b) Augmented Original Network
c) Mutual Reciprocal Adjoint Network,$\tilde{N}$

	Aug. Orig. Network		Rec. Adjoint Network	
	Voltage	Current	Voltage	Current
Port 1:	E_g	$I_1 + \Delta I_1$	0	$\tilde{I}_1 = -V_2$
Port 2:	$V_2 + \Delta V_2$	0	$\tilde{V}_2$	$\tilde{I}_2 = E_g$
int. netw.:	$V_\alpha + \Delta V_\alpha$	$I_\alpha + \Delta I_\alpha$	$\tilde{V}_\alpha$	$\tilde{I}_\alpha$

Multiplying and adding the corresponding terms as shown above yields

$$-E_g V_2 + (V_\alpha + \Delta V_\alpha)\tilde{I}_\alpha + E_g V_2 + \Delta V_2 E_g = 0 \qquad (4.1)$$

$$(I_\alpha + \Delta I_\alpha)\tilde{V}_\alpha = 0 \qquad (4.2)$$

Equating (4.1) and (4.2) and rearranging, results in the basic expression from where the proof starts for different kinds of network parameter.

$$(I_\alpha + \Delta I_\alpha)\tilde{V}_\alpha - (V_\alpha + \Delta V_\alpha)\tilde{I}_\alpha - E_g V_2 = 0 \qquad (4.3)$$

1. Passive Network Parameters

The proof is presented for impedance, inductive, and capacitive parameters only.

The constraints for the impedance case are

$$\begin{aligned} \tilde{V}_\alpha &= Z_\alpha \tilde{I}_\alpha \\ V_\alpha &= Z_\alpha I_\alpha \\ \Delta V_\alpha &= \Delta I_\alpha Z_\alpha + I_\alpha \Delta Z_\alpha \end{aligned} \qquad (4.4)$$

Substituting (4.4) in (4.3) and rearranging gives

$$\Delta V_2 E_g = -I_\alpha \tilde{I}_\alpha \Delta Z_\alpha \tag{4.5}$$

Letting the excitation be a unit voltage or current source, respectively, $E_g = 1$, leads to

$$\Delta V_2 = -I_\alpha \tilde{I}_\alpha \Delta Z_\alpha \tag{4.6}$$

or

$$\frac{\Delta V_2}{\Delta Z_\alpha} = -I_\alpha \tilde{I}_\alpha \tag{4.7}$$

Equation (4.7) gives the sensitivity of the output voltage with respect to changes in one impedance parameter. Multiplication of the current through the variable impedance in the original network, I_α, and the current through the corresponding parameter in the adjoint network, $\tilde{I}_\alpha$, is done conveniently in the frequency domain.

For the capacitive parameter the constraints are

$$\tilde{I}_\alpha = C_\alpha \frac{d\tilde{V}_\alpha}{dt} = jwC_\alpha \tilde{V}_\alpha$$

$$I_\alpha = C_\alpha \frac{dV_\alpha}{dt} = jwC_\alpha V_\alpha \tag{4.8}$$

$$\Delta I_\alpha = jw\Delta V_\alpha C_\alpha + jwV_\alpha \Delta C_\alpha$$

Substituting these constraints into (4.3) and solving for $\Delta V_2 E_g$ results in

$$\Delta V_2 E_g = jwV_\alpha \tilde{V}_\alpha \Delta C_\alpha \tag{4.9}$$

Letting the excitation source E_g equal to one gives

$$\frac{\Delta V_2}{\Delta C_\alpha} = jwV_\alpha \tilde{V}_\alpha \tag{4.10}$$

Equation (4.10) is the sensitivity of the output voltage of the original network, N, with respect to perturbations in one capacitive network parameter.

Finally the derivations for changes in an inductive element are shown. The auxiliary equations are

$$\tilde{V}_\alpha = L_\alpha \frac{d\tilde{I}_\alpha}{dt} = jw\, L_\alpha \tilde{I}_\alpha$$

$$V_\alpha = L_\alpha \frac{dI_\alpha}{dt} = jw\, L_\alpha I_\alpha \tag{4.11}$$

$$\Delta V_\alpha = jwI_\alpha \Delta L_\alpha + jw\Delta I_\alpha L_\alpha$$

Substituting (4.11) into (4.3) and solving for $\Delta V_2 E_g$ gives

$$\Delta V_2 E_g = -jwI_\alpha \tilde{I}_\alpha \Delta L_\alpha \tag{4.12}$$

Assuming the excitation sources, E_g, equal to one gives

$$\frac{\Delta V_2}{\Delta L_\alpha} = -jwI_\alpha \tilde{I}_\alpha \tag{4.13}$$

Equation (4.13) gives the incremental changes in output voltage due to variations in one inductive element in the original network.

These results agree with the given relations in TABLE 2, developed by Director and Rohrer. For better comparison

the corresponding expressions to equation (4.7), (4.10), and (4.13) are repeated here

$$\frac{\partial H}{\partial R} = -I_R(jw)\tilde{I}_R(jw)$$

$$\frac{\partial H}{\partial C} = jwV_C(jw)\tilde{V}_C(jw)$$

$$\frac{\partial H}{\partial L} = -jwI_L(jw)\tilde{I}_L(jw)$$

If the sensitivity of the output voltage depends on variations of all network parameters, the increments are added, applying the principle of superposition. The summations are taken over all corresponding network parameters. (4.7), (4.10) and (4.13) then become

$$\Delta V_2 = -\sum_\alpha I_\alpha \tilde{I}_\alpha \Delta Z_\alpha$$

$$\Delta V_2 = \sum_\alpha jwV_\alpha \tilde{V}_\alpha \Delta C_\alpha \qquad (4.14a,b,c)$$

$$\Delta V_2 = -\sum_\alpha jwI_\alpha \tilde{I}_\alpha \Delta L_\alpha$$

2. Dependent Sources

As an example for all four kinds of dependent sources, the derivation for the voltage dependent voltage source is presented. The proof for the three others is quite similar. In Fig. 7a the original network, excited by a voltage source E_g at port 1 and its adjoint (Fig. 7b), excited in a reciprocal

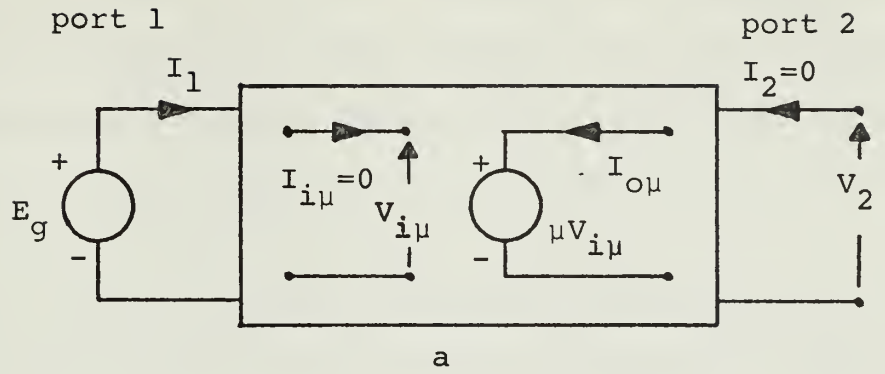

a

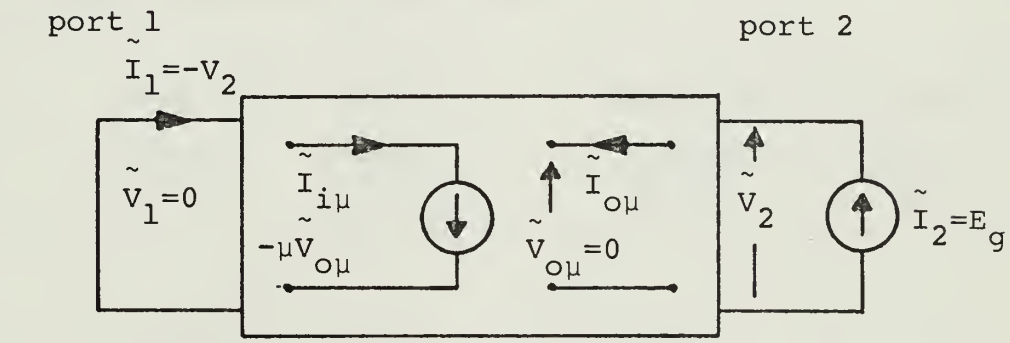

b

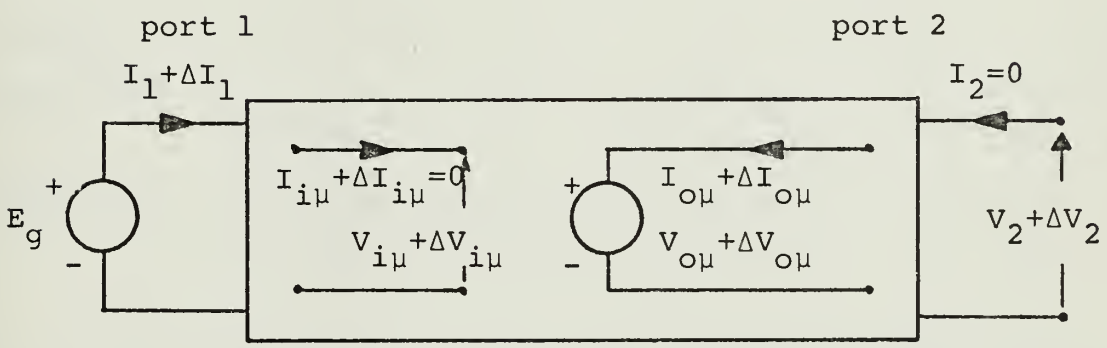

c

Figure 7: Reciprocal Two Port Networks Containing Voltage Dependent Voltage Sources
a) Original Network,N
b) Mutual Reciprocal Adjoint Network,$\tilde{N}$
c) Augmented Original Network

manner, are shown. Fig. 7c represents the augmented original circuit excited by the same voltage source, E_g. In Fig. 7c the incremental voltage change, $\Delta V_{o\mu}$, is defined as follows

$$\Delta V_{o\mu} = \mu \Delta V_{i\mu} + V_{i\mu} \Delta\mu \tag{4.15}$$

The ports and the internal voltages and currents for the augmented original and the adjoint network are tabulate and then Tellegen's theorem is applied

	Aug. Orig. Network		Rec. Adjoint Network	
	Voltage	Current	Voltage	Current
Port 1:	E_g	$I_1 + \Delta I_1$	0	$\tilde{I}_1 = -V_2$
Port 2:	$V_2+\Delta V_2$	0	$\tilde{V}_2$	$\tilde{I}_2 = E_g$
Internal				
Controlled Side :	$(V_{i\mu}+\Delta V_o)$	0	$\tilde{V}_{i\mu}$	$-\mu\tilde{I}_{o\mu}$
Dependent Side :	$(V_{o\mu}+\Delta V_{o\mu})$	$(I_{o\mu}+\Delta I_{o\mu})$	0	$\tilde{I}_{o\mu}$

Multiplying the inner and the outer columns as shown above yields

Outer Product:

$$-E_g V_2 + (V_2 + \Delta V_2)E_g + \sum_{i\mu/o\mu} (V_{i\mu} + \Delta V_{i\mu})(-\mu\tilde{I}_{o\mu}) + \sum_{i\mu/o\mu} (V_{o\mu} + \Delta V_{o\mu} + \Delta V_{o\mu})\tilde{I}_{o\mu} = 0 \tag{4.16}$$

Inner Product:

$$\sum_{i\mu/o\mu} = 0 \tag{4.17}$$

Where the summation is taken over all branches of dependent sources, controlling and dependent side. Multiplying out equation (4.16), rearranging and cancelling yeilds

$$E_g\Delta V_2 + \sum_{i\mu/o\mu} (-V_{i\mu}\mu\tilde{I}_{o\mu} - \Delta V_{i\mu}\mu\tilde{I}_{o\mu} + V_{o\mu}\tilde{I}_{o\mu} + V_{o\mu}\tilde{I}_{o\mu}) = 0 \quad (4.18)$$

Substituting

$$V_{o\mu} = \mu V_{i\mu}$$

and eliminating equal terms leads to

$$E_g\Delta V_2 + \sum_{i\mu/o\mu} (-\Delta V_{i\mu}\mu\tilde{I}_{o\mu} + \Delta V_{o\mu}\tilde{I}_{o\mu}) = 0 \quad (4.19)$$

Substituting (4.15) into (4.19) gives

$$E_g\Delta V_2 + \sum_{i\mu/o\mu} (- V_{i\mu}\mu\tilde{I}_{o\mu} + (\mu\Delta V_{i\mu} + V_{i\mu}\Delta\mu)\tilde{I}_{o\mu}) = 0 \quad (4.20)$$

Multiplying out and cancelling results in

$$E_g\Delta V_2 + \sum_{i\mu/o\mu} V_{i\mu}\tilde{I}_{i\mu}\Delta\mu = 0 \quad (4.21)$$

A voltage transfer function is defined as follows

$$V_2 = H \cdot E_g$$

then for the augmented network

$$(V_2 + \Delta V_2) = (H + \Delta H)E_g$$

and

$$\Delta V_2 = \Delta H \cdot E_g \tag{4.22}$$

Substituting (4.22) into (4.21) yields

$$\Delta H \cdot E_g^2 = \sum_{i\mu/o\mu} -V_{i\mu} \tilde{I}_{o\mu} \, \Delta\mu \tag{4.23}$$

Since H is a function of μ, an incremental change in the voltage transfer function with respect to the voltage amplification factor, μ, is given by

$$\Delta H = \sum_{i\mu/o\mu} \left(\frac{\partial H}{\partial \mu}\right) \Delta\mu \tag{4.24}$$

Comparing equation (4.24) with the rearranged equation (4.23) yields

$$\frac{\partial H}{\partial \mu} = \frac{V_{i\mu} \tilde{I}_{o\mu}}{E_g^2} \tag{4.25}$$

Letting the excitation voltage and current source, E_g, equal to one, gives the voltage transfer function sensitivity with respect to the voltage amplification factor, μ, as the product of the controlling branch voltage in the original circuit and the dependent branch current in the mutual reciprocal adjoint network. This proves the stated result of TABLE 2 which is repeated here for convenience

$$\frac{\partial H}{\partial \mu} = -V_{i\mu}(jw) \tilde{I}_{o\mu}(jw)$$

B. TRANSITION BETWEEN APPROACHES

The derivation of the sensitivities of a voltage transfer function in the previous paragraph was carried out in the frequency domain. The sensitivity model, as stated in Chapter III, is given in the time domain. To use the derived equations in the time domain requires further interpretation. For the original circuit (Fig. 6a) the voltage transfer function was defined as follows

$$H(s) = \frac{V_2(s)}{E_g(s)}$$

The sensitivity of the output voltage due to changes of any kind of passive network parameters, u_α, is then given by

$$\Delta V_2(s,u_\alpha) = E_g(s)\frac{\partial H(s,u_\alpha)}{\partial u_\alpha}\Delta u_\alpha \tag{4.26}$$

where the parameter, u_α, is itself a function of s and x such that

$$u_\alpha = u_\alpha(s,x) \tag{4.27}$$

Substituting (4.27) into (4.26) and applying the chain rule yields

$$\Delta V_2(s,u_\alpha) = E_g(s)\cdot\left(\frac{\partial H(s,u_\alpha)}{\partial u_\alpha}\right)\left(\frac{\partial u_\alpha}{\partial x}\right)\Delta x \tag{4.28}$$

Using for impedance type parameters equation (4.7) in conjunction with (4.22) and substituting into (4.28) leads to

$$\Delta V_2(s,x) = \frac{I_\alpha \tilde{I}_\alpha}{E_g(s)}\left(\frac{\partial u_\alpha}{\partial x}\right)\Delta x \tag{4.29}$$

Making the assumption that $E_g(t)$ is a unit impulse, $u_\alpha = Z$, and $x = Z$, the transition into the time domain of $\Delta V_2(s,x)$ is given by the convolution of the resistor current in the original network and the current through the corresponding resistor in the adjoint network. Then the sensitivity of an incremental change of the output voltage with respect to variations in one resistive element is

$$\frac{\Delta V_2(t,R)}{\Delta R} = I_\alpha(t) * \tilde{I}_\alpha(t) \tag{4.30}$$

If it is required to find the variation of V_2 with respect to all resistive parameters the changes are added due to the superposition principle over all branches, α, containing resistors. Therefore

$$\frac{\Delta V_2(t,R)}{\Delta R} = \sum_\alpha i_\alpha(t) * \tilde{i}_\alpha(t) \tag{4.31}$$

For inductive parameters $u_\alpha = sL$ and $x = L$ $\Delta V_2(t,L)$ is determined by the time derivative of the convolution between the corresponding inductor currents in the original network and its adjoint. Therefore

$$\frac{\Delta V_2(t,L)}{\Delta L} = \sum_\alpha \frac{d}{dt}(i_\alpha(t) * \tilde{i}_\alpha(t)) \tag{4.32}$$

Finally for capacitive elements the sensitivity of V_2 due to changes in all capacitors turns out to be the summation over all capacitive branches of the time derivative of the

convolution between the voltages across corresponding capacitors in the original and its adjoint network. Therefore

$$\frac{\Delta V_2(t,C)}{\Delta C} = \sum_{\alpha} \frac{d}{dt} \left(V_\alpha(t) * \tilde{V}_\alpha(t)\right) \tag{4.33}$$

Starting with equation (4.29) the computational process can be simplified by considering the adjoint network (Fig. 8), excited by a current source, $\tilde{I}_2$, as follows

$$\tilde{I}_2 = \left(\frac{\partial u_\alpha}{\partial x}\right) I_\alpha \tag{4.34}$$

The current through the variable parameter, $\tilde{I}_\alpha$, is then given by

$$\tilde{I}_\alpha = \frac{\partial V_2(s,x)}{\partial x} \tag{4.35}$$

Remembering that $E_g(s)$ is unity in the frequency domain and a unit impulse in the time domain, the sensitivity of the output voltage, ΔV_2, is given by

$$\frac{\Delta V_2(s,x)}{\Delta x} = \tilde{I}_\alpha(s,x) \tag{4.36}$$

in the frequency domain, and by

$$\frac{\Delta V_2(t,x)}{\Delta x} = \tilde{i}_\alpha(t,x) \tag{4.37}$$

in the time domain.

If the interreciprocity theorem is applied to the circuit of Fig. 8, interchanging excitation source, $\tilde{I}_2$, and response,

$\tilde{I}_\alpha$, the sensitivity model is obtained as shown in Fig. 9a. Fig. 9a holds for the frequency domain as well (t replaced by s). This derivation is valid for all types of passive network parameters.

For the transition of the dependent sources the voltage dependent voltage source is chosen, where

$$u_\alpha(s,x) = V_{o\mu}(s,\mu) \tag{4.38}$$

such that

$$x = \mu$$

Equation (4.29) becomes

$$\Delta V_2(s,\mu) = - \frac{V_{i\mu}\tilde{I}_{o\mu}}{E_g(s)} \frac{\partial V_{o\mu}(s,\mu)}{\partial \mu} \Delta\mu \tag{4.39}$$

From Fig. 8 the excitation, $\tilde{I}_2$, becomes a voltage source of value

$$\tilde{I}_2 = \frac{\partial V_{o\mu}(s,\mu)}{\partial \mu} (-V_{i\mu}) \tag{4.40}$$

Then the current in the dependent branch of the current dependent current source in the adjoint network, $\tilde{I}_{o\mu}$, gives the desired sensitivity

$$\tilde{I}_{o\mu}(s) = \frac{\Delta V_2(s,\mu)}{\Delta\mu} \tag{4.41}$$

in the frequency domain and

$$i_{i\mu}(t) = \frac{\Delta V_2(t,\mu)}{\Delta\mu} \tag{4.42}$$

in the time domain.

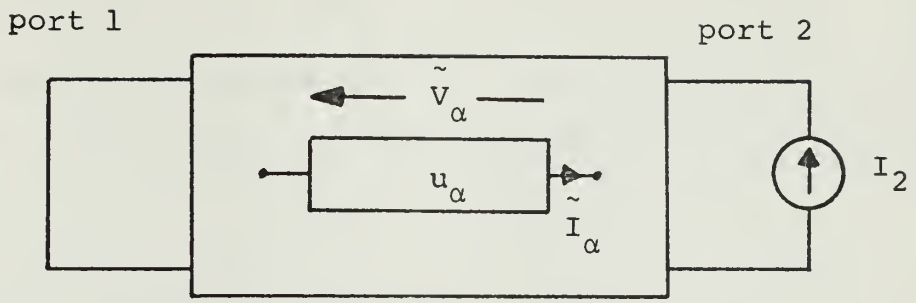

Figure 8: General Interreciprocal Network

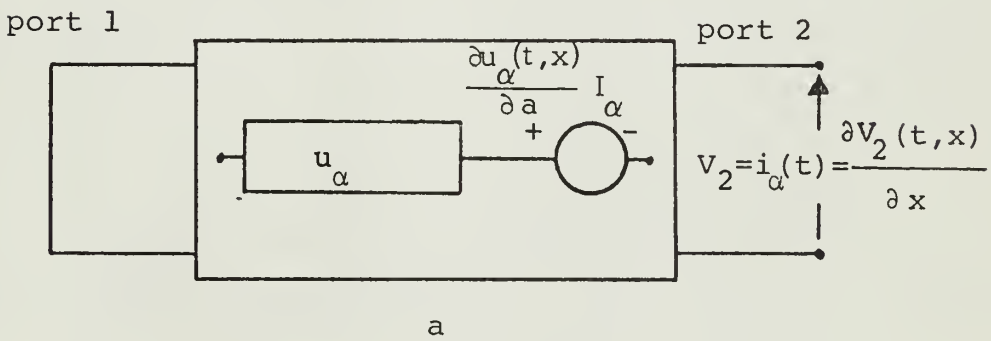

Figure 9: Sensitivity Models Derived by Application of Tellegen's Theorem and the Mutual Recprical Adjoint Network
a) For One-Port Passive Parameters
b) Voltage Dependent Voltage Source

Interchanging the excitation and the response, referring to Fig. 8 and Fig. 9a, leads to the sensitivity model of a voltage dependent voltage source. The excitation voltage source, $\tilde{I}_2$, given in (4.40) has to be transferred into the time domain such that

$$\tilde{i}_2(t) = \frac{\partial V_{o\mu}(t,\mu)}{\partial \mu} * (-V_{i\mu}(t)) \tag{4.43}$$

Knowing that

$$\frac{\partial V_o}{\partial \mu} = \mu \frac{\partial V_i}{\partial \mu} + v_i \tag{4.44}$$

gives

$$\tilde{i}_2(t) = (\mu \frac{\partial V_i}{\partial \mu} + v_i) * (-V_{i\mu}(t)) \tag{4.45}$$

The minus sign in front of $V_{i\mu}$ means that the excitation source in the sensitivity model has to oppose the normal current flow. To be consistent with the structure of a dependent source and the equation (4.45), $V_{i\mu}$ has to be as follows

$$V_{i\mu}(t) = \frac{\partial v_i(t)}{\partial \mu} \tag{4.46}$$

Substituting (4.46) into (4.45) leads to the sensitivity model (Fig. 9b) as stated in Chapter III.

C. COMPARISON OF THE TWO APPROACHES

As a main conclusion it can be stated that the sensitivity model is not an independent method for computation of network sensitivity but a special case of the mutual adjoint network.

For sensitivity calculations in the frequency domain with respect to single element perturbations both methods are equally well suited. If the total increment in sensitivity due to variations in several parameters is required, the adjoint network approach is advantageous because still only a single excitation is required and the analyses of only two networks at each frequency point are necessary. This is in contrast with the use of the sensitivity model where a separate source is required for each variable element. This requires the analysis of one network for each parameter at each frequency point.

In the time domain the sensitivity model is the better approach, especially if single parameter changes are involved. The desired sensitivity requires the analysis of one network only and the answer comes out immediately in the time domain. In contrast, the adjoint network approach involves the analysis of two networks and requires convolution of the corresponding circuit responses. Alternately, in the time domain, the adjoint network may be excited by a source with backward running time.

BIBLIOGRAPHY

1. Director, S. W. and Rohrer, R. A., Inter-Reciprocity and Its Implications, International Symposium on Network Theory, Belgrade, Yugoslavia, 1968, p. 11-30.

2. Director, S. W. and Rohrer, R. A., On the Efficient Computation of First-Order Network Sensitivities (For Frequency Domain Studies of Lumped, Time-Invariant Networks), System Sensitivity and Adaptivity, Dubrovnik, Yugoslavia, August 26 - 31, 1968, p. B.54 - B.69.

3. Director, S. W. and Rohrer, R. A., Automated Network Design - The Frequency-Domain Case, IEEE Transaction on Circuit Theory, Vol. CT-16, No. 3, August 69, p. 330 - 337.

4. Director, S. W. and Rohrer, R. A., The Generalized Adjoint Network and Network Sensitivities, IEEE Transaction on Circuit Theory, Vol. CT-16, No. 3, August 1969, p. 318 - 323.

5. Leeds, J. V. and Urgon, G. I., Simplified Multiple Parameter Sensitivity Calculation and Continuously Equivalent Networks, IEEE Transaction on Circuit Theory, Vol. CT-14, No. 2, June 1967, p. 188 - 191.

6. Parker, S. R., Sensitivity Analysis and Models of Nonlinear Circuits, IEEE Transaction on Circuit Theory, Vol. CT-16, No. 4, November 1969, p. 443 - 447.

7. Parker, S. R. and Barmes, V. T., Existence of Numerical Solutions and the Order of Linear Circuits with Dependent Sources, submitted IEEE Transaction on Circuit Theory, March 70.

8. Tomovic, R., Sensitivity Analysis of Dynamic Systems, New York, McGraw-Hill, 1964.

INITIAL DISTRIBUTION LIST

		No. Copies
1.	Defense Documentation Center Cameron Station Alexandria, Virginia 22314	2
2.	Library, Code 0212 Naval Postgraduate School Monterey, California 93940	2
3.	Inspektion des Erziehungs- und Bildungswesen der Marine (294) Wilhelmshaven West-Germany	1
4.	Professor S. R. Parker, Code Department of Electrical Engineering Naval Postgraduate School Monterey, California 93940	2
5.	LCDR Bernd G. Sanne, FGN (239) Flensburg Murwiker Str. 43 c./o. Keller West-Germany	1

Security Classification

DOCUMENT CONTROL DATA - R & D

(Security classification of title, body of abstract and indexing annotation must be entered when the overall report is classified)

1. ORIGINATING ACTIVITY (Corporate author)	2a. REPORT SECURITY CLASSIFICATION
Naval Postgraduate School Monterey, California 93940	Unclassified
	2b. GROUP

3 REPORT TITLE

Relationships Between the Sensitivity Model and the Mutually Reciprocal Adjoint Network

4. DESCRIPTIVE NOTES (Type of report and inclusive dates)

Master's Thesis; September 1970

5. AUTHOR(S) (First name, middle initial, last name)

Bernd Günter Sanne

6. REPORT DATE	7a. TOTAL NO. OF PAGES	7b. NO. OF REFS
September 1970	52	8

8a. CONTRACT OR GRANT NO.	9a. ORIGINATOR'S REPORT NUMBER(S)
b. PROJECT NO.	
c.	9b. OTHER REPORT NO(S) (Any other numbers that may be assigned this report)
d.	

10. DISTRIBUTION STATEMENT

This document has been approved for public release and sale, its distribution is unlimited.

11. SUPPLEMENTARY NOTES	12. SPONSORING MILITARY ACTIVITY
	Naval Postgraduate School Monterey, California 93940

13. ABSTRACT

There are two methods which have been developed independently for computing network sensitivities. Both computations may be carried out in the frequency or in the time domains. One method involves the analyses of two networks - the original and its mutually reciprocal adjoint. The second method uses a sensitivity model for the circuit. It is shown that the sensitivity model and the mutually reciprocal adjoint circuit are essentially the same; the sensitivity model being useful for calculating single parameter sensitivity in the time domain, the adjoint circuit being useful for calculating sensitivity for several parameters in the frequency domain.

DD FORM 1 NOV 65 1473 (PAGE 1)

S/N 0101-807-6811

Security Classification

A-31408

14. KEY WORDS	LINK A		LINK B		LINK C	
	ROLE	WT	ROLE	WT	ROLE	WT
Mutual Reciprocal Adjoint Network						
Interreciprocity Theorem						
Sensitivity Models						
Sensitivity Calculations (Different Approaches)						

Thesis
S166 Sanne
c.1 Relationships between the sensitivity model and the mutually reciprocal adjoint network.
122755

Thesis
S166 Sanne
c.1 Relationships between the sensitivity model and the mutually reciprocal adjoint network.
122755

thesS166
Relationships between the sensitivity mo
3 2768 001 00163 9
DUDLEY KNOX LIBRARY